For hand control valves and automated valves with actuator and positioners

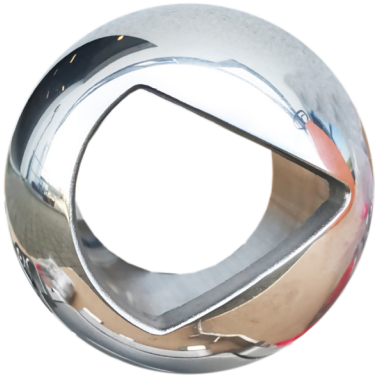

MODU 83, 88, 90D, 99

V-port ball

- Stainless Steel “CF8M” DN10-DN150
- Ball with special V-cut for control valves based on 3-piece ball valve MODU 83 and 88, as well as flange ball valve 90D and 99
- Can be used both for hand control valves and automated valves with actuator and positioners
- ISO 14001 certification

Make it better.

MODU®

MODU 83, 88, 90D, 99

V-port ball

Variants

30° V-port
60° V-port

Field of application

Flow control on water, gas, steam, oil etc.

Options on request

15° V-port
90° V-port
Slot 1mm, 1,6mm and 3,2mm

Control valve assembly

A complete control valve usually consists of the following components:

- Ball valve mounted with V-port ball 30° or 60°
- Bracket/coupling
- Pneumatic actuator
- Adapter bracket for positions
- Electropneumatic positions 4-20mA
- Fittings and air hoses

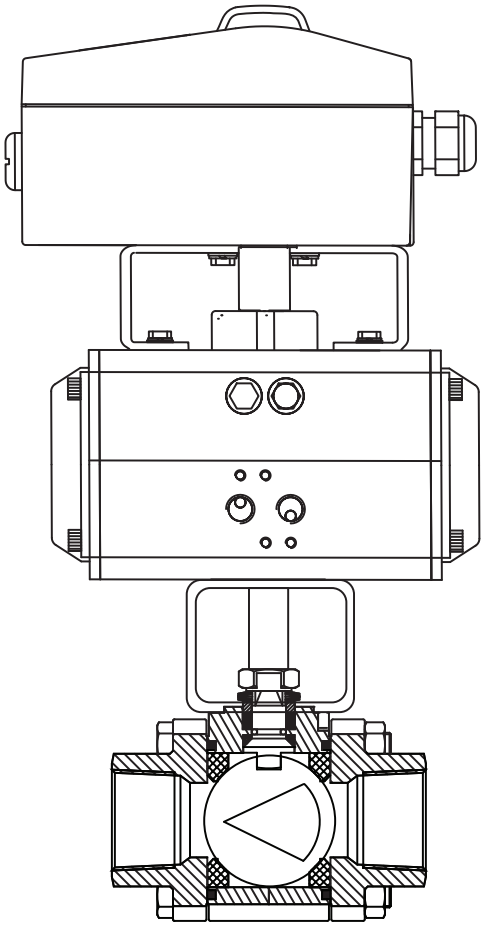

Developed for your industry

Additional specification can be requested.

Make it better.

MODU Valves A/S • moduvalves.com

Improve the quality

We help Engineers to improve the quality of your manufacturing process.

Optimize total cost

We help Purchasing Officers to optimize total cost of production, prevent downtime and safeguard your brand.

Work smarter

We help Maintenance Crews to work smarter, while preventing time-consuming mistakes.

01MODU_VPORT_DATA-SHEET_V001

MODU 83, 88, 90D, 99

V-port ball

Control area

V-port control valves from MODU are characterized by a drop-tight seal when the ball valve closes. This means that in the control range from 0% to ~ 10% (depending on valve size), the control valve will be completely closed. It is possible to regulate in the entire range between 10% and up to 100% where the V port is completely open. The optimal control range for a V-port is between approx. 20% and 80% opening. Continuous regulation in the range of 10% to 20% will increase wear on valve seats as flow velocity will rise a lot due to the very limited flow area.

When we design a control ball valve, we make the control valve work as far as possible within the optimal control range to provide the best conditions and life span.

Due to the high flow values of the V-port control valve and laminar flow properties, it may often be possible to choose a smaller valve size than, for example, a seat control valve. This may in practice mean that it is possible to select a smaller dimension valve than the pipeline to be mounted in. This will require a downsizing of the pipe system, but at the same time it means less valve and actuator with savings as a benefit.

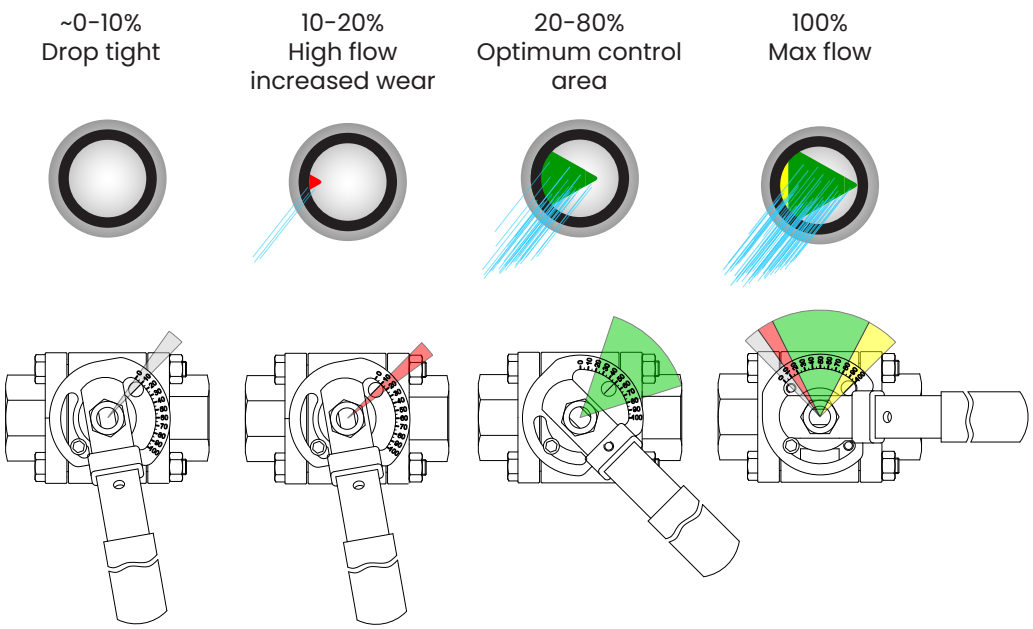

MODU 83, 88, 90D, 99

V-port ball

Flow-value Kvs [m³/h]

DIMENSION	V-PORT	0%	15%	20%	30%	40%	50%	60%	70%	80%	90%	100%
DN10FB/ DN15RB	V30	0.00	0.00	0.00	0.03	0.08	0.14	0.25	0.38	0.52	0.70	0.88
	V60	0.00	0.00	0.00	0.05	0.12	0.25	0.46	0.70	1.04	1.44	1.91
DN15FB/ DN20RB	V30	0.00	0.09	0.09	0.17	0.26	0.43	0.68	0.94	1.36	1.87	2.21
	V60	0.00	0.09	0.09	0.26	0.43	0.77	1.19	1.70	2.81	3.74	5.10
	V90	0.00	0.09	0.17	0.34	0.51	0.77	1.28	1.87	3.23	4.59	5.87
DN20FB/ DN25RB	V30	0.00	0.09	0.17	0.43	0.60	0.94	1.53	2.04	2.81	3.83	4.59
	V60	0.00	0.09	0.17	0.60	0.85	1.45	2.38	3.40	5.53	7.65	10.20
	V90	0.00	0.17	0.34	0.68	1.02	1.70	2.64	3.91	6.80	9.61	11.90
DN25FB/ DN32RB	V30	0.00	0.09	0.26	0.68	1.11	1.96	2.98	4.34	7.23	8.33	8.50
	V60	0.00	0.17	0.34	0.94	1.53	2.89	4.51	6.72	10.46	13.01	17.85
	V90	0.00	0.17	0.51	1.53	2.89	4.34	6.89	9.69	13.60	17.85	24.65
DN32FB/ DN40RB	V30	0.00	0.17	0.34	0.94	1.70	3.15	4.68	6.80	8.50	11.05	12.75
	V60	0.00	0.17	0.51	1.53	2.55	4.68	8.08	10.88	16.15	22.10	33.15
	V90	0.00	0.26	0.68	1.70	4.25	6.80	11.90	16.15	23.80	33.15	46.75
DN40FB/ DN50RB	V30	0.00	0.26	0.51	1.36	2.55	4.25	6.38	9.35	11.90	14.45	17.00
	V60	0.00	0.34	0.68	2.13	3.40	6.80	11.05	16.15	22,95	34.00	44.20
	V90	0.00	0.34	0.77	2.98	5.95	11.05	17.00	26.35	35.70	53.55	66.30
DN50FB/ DN65RB	V30	0.00	0.34	0.84	3.23	5.10	8.50	12.75	19.55	26.35	36.55	51.00
	V60	0.00	0.34	1.28	3.91	7.65	14.03	22.95	33.15	46.75	70.55	93.50
	V90	0.00	0.43	1.45	5.10	10.20	18.70	29.75	38.25	59.50	89.25	114.75
DN65FB/ DN80RB	V30	0.00	0.34	1.02	3.40	6.80	10.20	15.30	23.80	31.45	52.70	63.75
	V60	0.00	0.34	1.28	4.25	8.50	17.85	28.90	45.05	63.75	87.55	127.50
	V90	0.00	0.43	1.70	5.95	11.90	23.80	40.80	59.50	90.10	136.00	185.30
DN80FB/ DN100RB	V30	0.00	0.43	1.02	3.40	6.80	11.90	19.55	28.05	39.10	55.25	69.70
	V60	0.00	0.43	2.13	5.10	11.90	21.25	34.00	55.25	77.35	108.80	140.25
	V90	0.00	0.60	2.98	6.80	15.30	29.75	51.00	76.50	114.75	174.25	263.50
DN100FB	V30	0.00	0.51	1.70	5.10	12.75	24.65	40.80	60.35	85.00	110.50	135.15
	V60	0.00	0.60	2.55	9.35	21.25	34.00	50.15	76.50	119.85	180.20	302.60
	V90	0.00	0.85	2.98	13.60	34.00	63.75	106.25	161.50	250.75	375.70	569.50
DN150FB*	V30	0.00	0.77	2.72	11.90	28.05	51.00	87.55	131.75	187.00	238.00	297.50
	V60	0.00	1.70	4.25	18.70	51.00	93.50	161.50	242.25	353.60	498.10	680.00
	V90	0.00	2.55	6.80	29.75	76.50	136.00	238.00	361.25	552.50	824.50	1258.00

* Only for MODU 90D Flange ball valve

Flow-value Kvs - special shaped bal

DIMENSION	V-PORT SLOT mm	0%	10%	20%	30%	40%	50%	60%	70%	80%	90%	100%
DN10FB/ DN15RB	V15	0.00	0.00	0.01	0.02	0.05	0.06	0.10	0.20	0.25	0.35	0.45
	S1,0	0.00	0.00	0.03	0.06	0.09	0.13	0.15	0.18	0.21	0.25	0.28
	S1,6	0.00	0.00	0.07	0.14	0.23	0.31	0.38	0.47	0.54	0.62	0.71
	S3,2	0.00	0.00	0.12	0.25	0,38	0.50	0.62	0.74	0.88	1.01	1.16
DN15FB/ DN20RB	V15	0.00	0.00	0.05	0.10	0.15	0.20	0.35	0.45	0.70	0.85	1.10
	S1,0	0.00	0.00	0.04	0.08	0.12	0.17	0.20	0.25	0.28	0.33	0.37
	S1,6	0.00	0.00	0.09	0.19	0.30	0.41	0.51	0.62	0.72	0.83	0.95
	S3,2	0.00	0.00	0.16	0.33	0.50	0.66	0.82	0.99	1.17	1.35	1.55
DN20FB/ DN25RB	V15	0.00	0.00	0.05	0.20	0.30	0.45	0.75	1.00	1.40	1.90	2.30
	S1,0	0.00	0.00	0.05	0.11	0.17	0.22	0.28	0.34	0.39	0.45	0.51
	S1,6	0.00	0.00	0.12	0.24	0.37	0.49	0.61	0.74	0.86	0.99	1.14
	S3,2	0.00	0.00	0.20	0.40	0.62	0.84	1.07	1.29	0.51	1.72	1.98
DN25FB/ DN32RB	V15	0.00	0.00	0.15	0.35	0.55	1.00	1.50	2.15	3.60	4.15	4.25
	S1,0	0.00	0.00	0.08	0.16	0.23	0.31	0.39	0.48	0.56	0.63	0.73
	S1,6	0.00	0.00	0.20	0.43	0.64	0.85	1.06	1.27	1.48	1.69	1.90
	S3,2	0.00	0.00	0.32	0.66	1.00	1.38	1.75	2.10	2.50	2.85	3.18

Make it better.